hansgrohe

Vivenis
4-Hole Roman Tub Set Trim with 1.8 GPM Handshower
Finishes : **chrome** Part no. : **75443001**

Description

Features

- Consists of: 4-Hole Roman tub filler trim, Handshower, Handshower holder
- spray type mixer: WaterfallStream
- spray type hand shower: PowderRain
- Maximum pull-out length of hand shower: 55 inches
- flow rate of hand shower at 3 bar: 1.75 GPM (6.6 L/Min)
- 90° ceramic valves

Item details

List Price	$ 1,200.00

Technology

AirPower

Design awards

reddot winner 2021

GERMAN DESIGN AWARD WINNER 2022

Compliance

WaterSense Meets EPA Criteria Certified by IAPMO R&T

UPC C ®

Product image
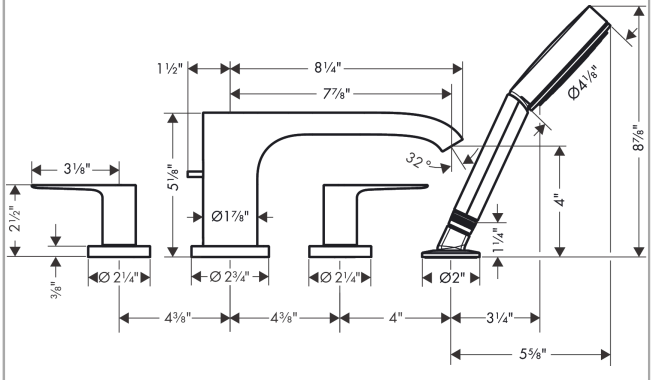
Scale drawing