Carrier-Arms

Wall-Mounted Sinks

1" carrier arms, shown in diagram below, designed for select wall-mounted sinks.

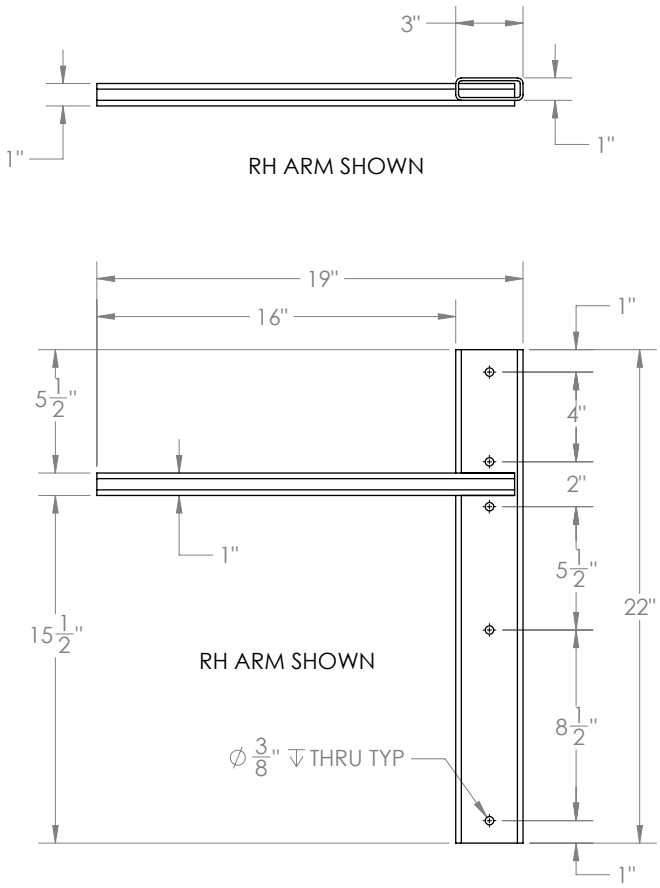

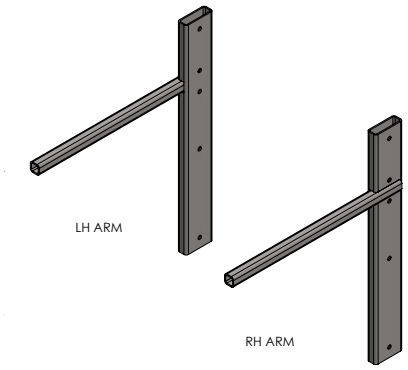

1" carrier arms (CAWM2)

Sink Model(s)	Arm Size	Part #	MSRP*
MTCS700D MTCS701D MTCS719D MTCS736D	1" x 18"	CAWM2	**$425**
MTCS767D	2" x 18"	CCA2	**$585**

*Priced above when ordered with sink

FEATURES AND ORDERING

- Designed with upper extension for maximum strength and stability.
- MTI strongly recommends use of these concealed carrier arms with MTI wall-mounted sinks. See chart on this page for ordering details.

INSTALLATION

- Secure each arm to the stud with 5/16" x 3" hex head bolts and flat washers. Finish with flat washer, lock washer and nut. Mounting hardware is not included.
- Use backing when installed to metal studs.
- Adhere sink unit to the arms using 3M VHB tape or a liquid adhesive such as Liquid Nails. Check local codes.
- See installation guide for more details.

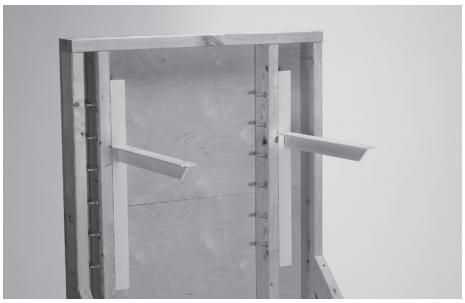

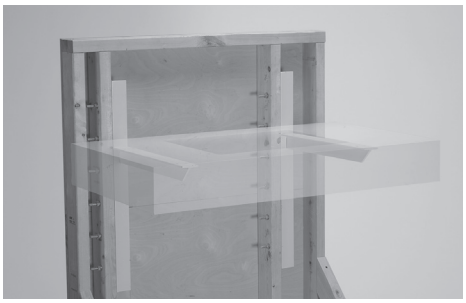

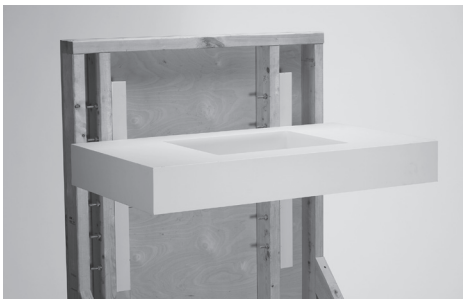

2" concealed carrier arms for counter-sinks and Metropolis (MTCS767D) wall-mounted sink shown above with a reach of 18". When ordered with the counter-sink, MTI will ship the appropriate size carrier arms. When ordering with wall-mounted sink, must include part code for proper size carrier arms (see above chart).

MTI's Customer Service Department is available
Monday-Friday 8am-6pm EST
800-783-8827 or service@mtibaths.com

©2022 by MTI Baths, Inc. Modification Rights Reserved